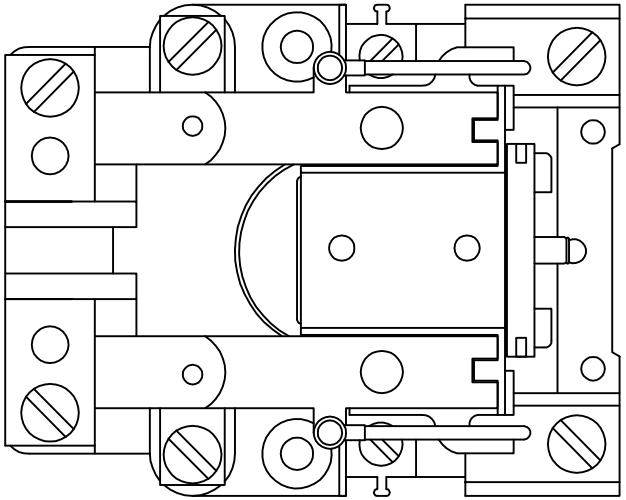

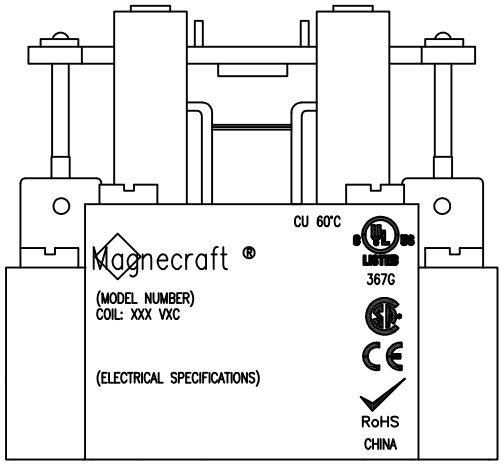

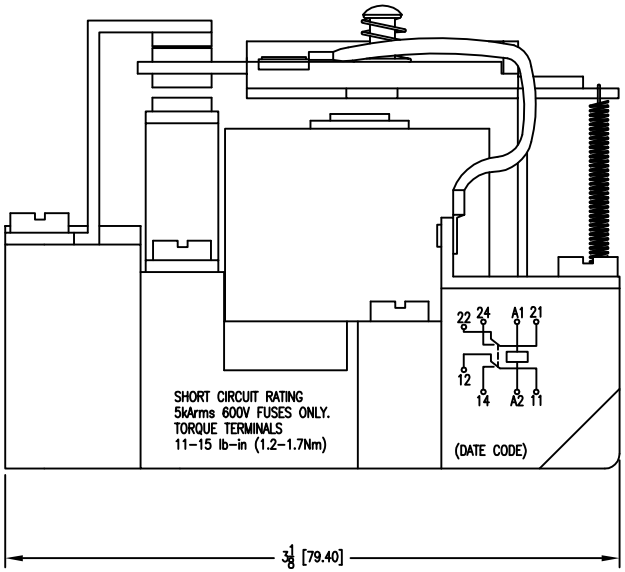

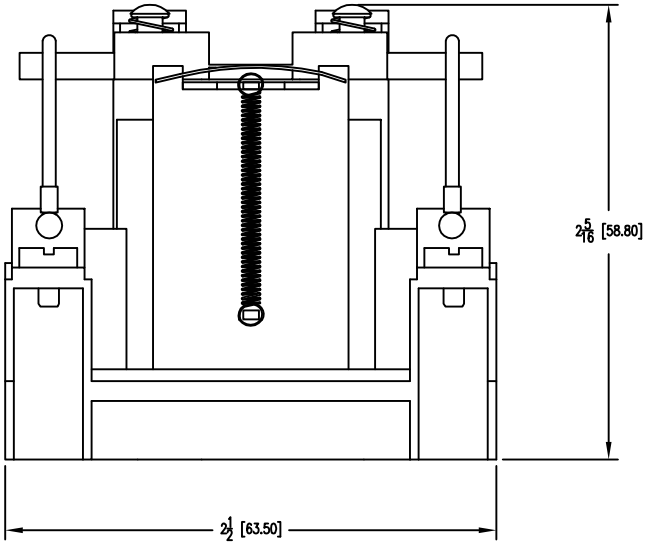

CD = CRITICAL DIMENSION
STANDARD TOLERANCES UNLESS NOTED:
ALL DECIMAL DIMENSIONS ±
ALL ANGLES ±

*** DWYER PURCHASING USE ONLY ***	
FR. Number	Description

☐ Items to be supplied with each order. Quantities plus 20%.
☐ Items to be supplied in blanket quantities, vendor to inform DWYER when they require additional quantities.

NO.	CHANGES	BY/DATE

DATE	
DWN BY	
CHKD	
APPD	

NAME: 199 SERIES OPEN STYLE POWER RELAYS

ACAD2002

MATERIAL

FINISH

DWYER INSTRUMENTS, INC.
MICHIGAN CITY, INDIANA 46360 U.S.A.

FR. NO.

NOTICE: This drawing and the principles and elements of design embodied therein are the exclusive property of DWYER INSTRUMENTS, INC. and are not to be communicated, disclosed, reproduced or used except as previously authorized in writing by such corporation and must not be submitted to outside parties for examination without the written consent of said corporation.